A Mathematical Study of Hems

For the FreeCAD sheet metal workbench

R is the bend radius

E is the thickness

ℓ is the leg length

β is the bend angle

In the following, all variables are positive reals

Flat hem

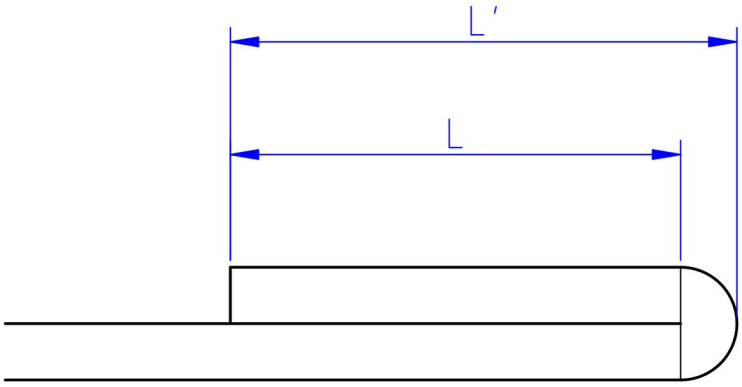

<u>User parameters:</u>

Hem total length L'

<u>Create one bend wall with the following parameters:</u>

bend radius $= R = 0$

bend angle $= \beta = 180°$

leg length $= \ell = L' - E$

<u>Check:</u>

$L' > E$

Open hem

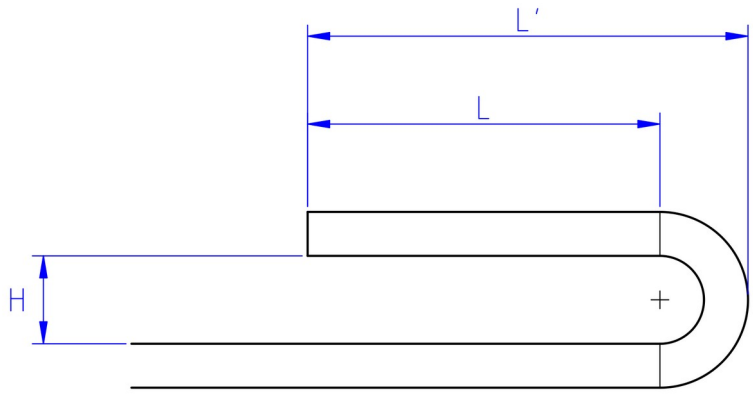

User parameters:

Hem total length L'

Opening height H

Create one bend wall with the following parameters:

bend radius $= R = H/2$

bend angle $= \beta = 180°$

leg length $= \ell = L' - R - E$

Check:

$L' > R + E$

Closed rolled hem

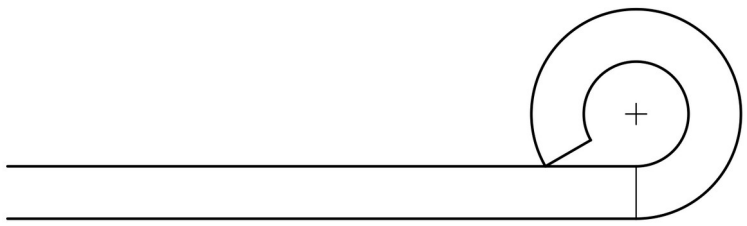

User parameters:

Bend radius R

Create one bend wall with the following parameters:

bend angle $= \beta = 270° + \arcsin\left(\frac{R}{R+E}\right)$

leg length $= \ell = 0$

Open rolled hem

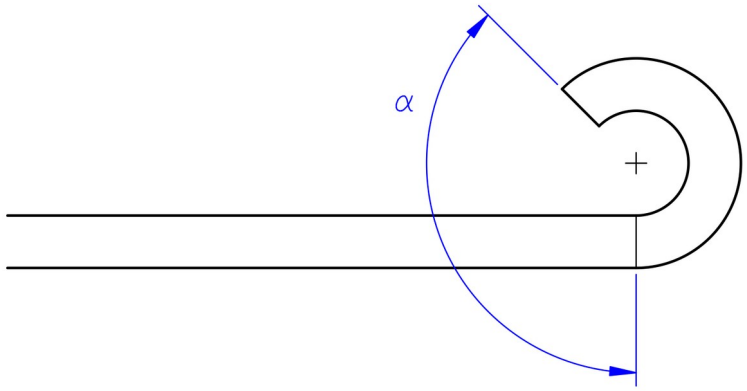

<u>User parameters:</u>

Bend radius R

Opening angle α

Create one bend wall with the following parameters:

bend angle $=\beta=360°-\alpha$

leg length $=\ell=0$

<u>Check:</u>

$\beta \leq \beta_{\max}$

$$\beta_{\max}=270°+\arcsin\left(\frac{R}{R+E}\right)$$

Teardrop hem

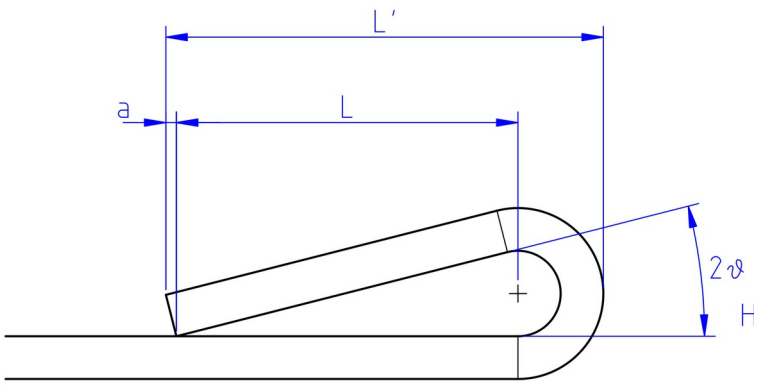

<u>Parameters:</u>

Bend radius R

Hem total length L'

<u>Compute:</u>

Let $\theta=\arctan(R/L)$ and $L_{\text{bend}}=R+E$

Thus $L'-L_{\text{bend}}=L+a$

It can be determined that $a=E\sin(2\theta)=E\sin[2\arctan(R/L)]$

Hence L is the solution of the equation $L-L'+L_{\text{bend}}+E\sin[2\arctan(R/L)]=0$

Due to the geometry, $L'-L_{\text{bend}}>L>L'-L_{\text{bend}}-E$

Solve the equation numerically using bisection method width $\varepsilon=10^{-9}$

<u>Create one bend with the following parameters:</u>

bend angle $=\beta=180°+\theta$

leg length $=\ell=L$

<u>Check:</u>

$L'>R+E$

Open teardrop hem

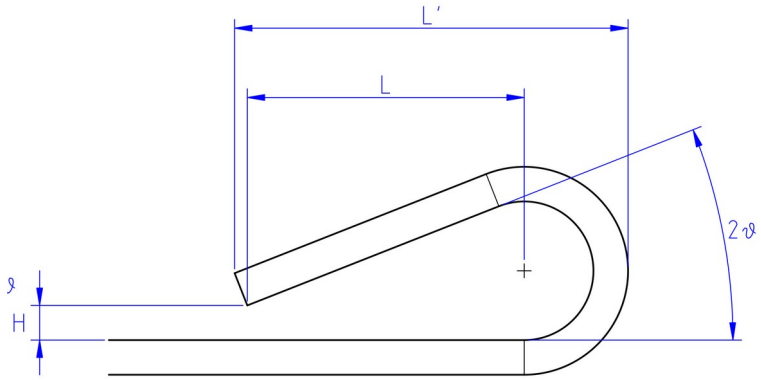

<u>Parameters:</u>

Bend radius R

Opening height H

Hem total length L'

<u>Compute:</u>

Let $\theta=\arctan\left(\frac{L-\sqrt{L^2-2RH+H^2}}{H}\right)$ and $L_{\text{bend}}=R+E$

Thus $L'-L_{\text{bend}}=L+a$

It can be determined that $a=E\sin(2\theta)=E\sin[2\arctan(R/L)]$

Hence L is the solution of the equation $L-L'+L_{\text{bend}}+E\sin[2\arctan(R/L)]=0$

Due to the geometry, $L'-L_{\text{bend}}>L>L'-L_{\text{bend}}-E$

<u>Create one bend with the following parameters:</u>

bend angle $=\beta=180°+2\theta$

leg length $= \ell = H \times \frac{\cos(2\theta) - 1}{\sin(2\theta)} + L$

Check:

$L' > R + E$

Degenerate teardrop hem

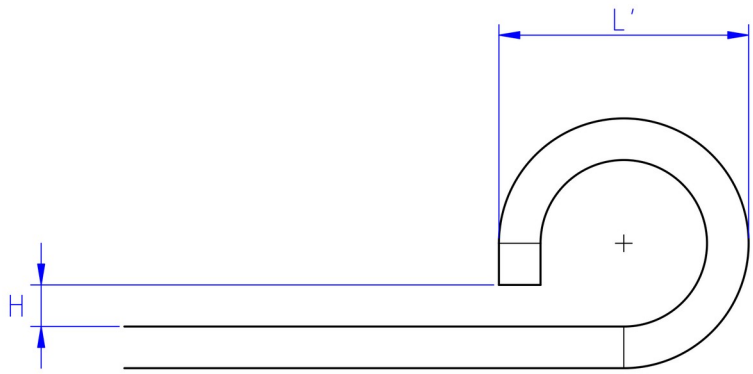

In the case when $L' = R + E$

<u>Parameters:</u>

Bend radius R

Opening height H

Hem length L' (unused)

<u>Create one bend with the following parameters:</u>

bend angle $= \beta = 270°$

leg length $= \ell = R - H$

<u>Check:</u>

$H < R$